MITSUBISHI ELECTRIC

INDUSTRIAL SEWING MACHINE
Attachment

MODEL

MP-J25-AD

TECHNICAL MANUAL

Abnormal Stitch Detector

A180E839P01

FOR SAFE USE

Before the installation, operation, and inspection for this product, read the “FOR SAFE USE” and the technical manuals carefully. Also read the other technical manuals, “Sewing Machine Head”, “Control Unit” and “Operation Panel” describing some instructions, which are not in this manual, and use the sewing machine properly.

SAFETY INDICATIONS

⚠ CAUTION	Indicates that incorrect handling may cause hazardous conditions, resulting in medium or slight personal injury or physical damage. Note that CAUTION level may lead to a serious consequence according to the circumstances. Always follow the instructions of both levels because they are important to personal safety.

CAUTION INDICATIONS

No.	Caution indication	Description
1	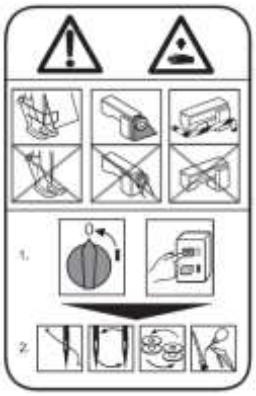	<u>Precaution for sewing machine operation</u>: Indicates that removing the safety and operating the sewing machine for some other purposes with power-on are prohibited. ● Please do not operate the sewing machine without protective equipment such as a needle guard, an eye guard, a belt cover or the others. ● Please turn off the power switch when threading, changing a needle and a bobbin, cleaning, and lubricating.
2		<u>Caution for fingers injury</u>: Indicates a possibility of fingers (hands) injury in a certain condition.
3		<u>Caution for squeezing fingers</u>: Indicates a possibility of squeezing fingers in a certain condition.

Introduction

It is not possible for this device to detect all abnormal stitch. Please use this device after reading this technical manual a lot and being sure to adjust depend on threads and sewing materials.

Note If you use this device without adjusting, there are risk that it causes the yet to be detected and misdetection.

1. Configuration

The Fig. numbers in the drawing correspond to the part numbers given in the following explanations. When ordering service parts, please specify in the Parts No. (M********).

1-1. Abnormal stitch detector parts, Fiber amp parts

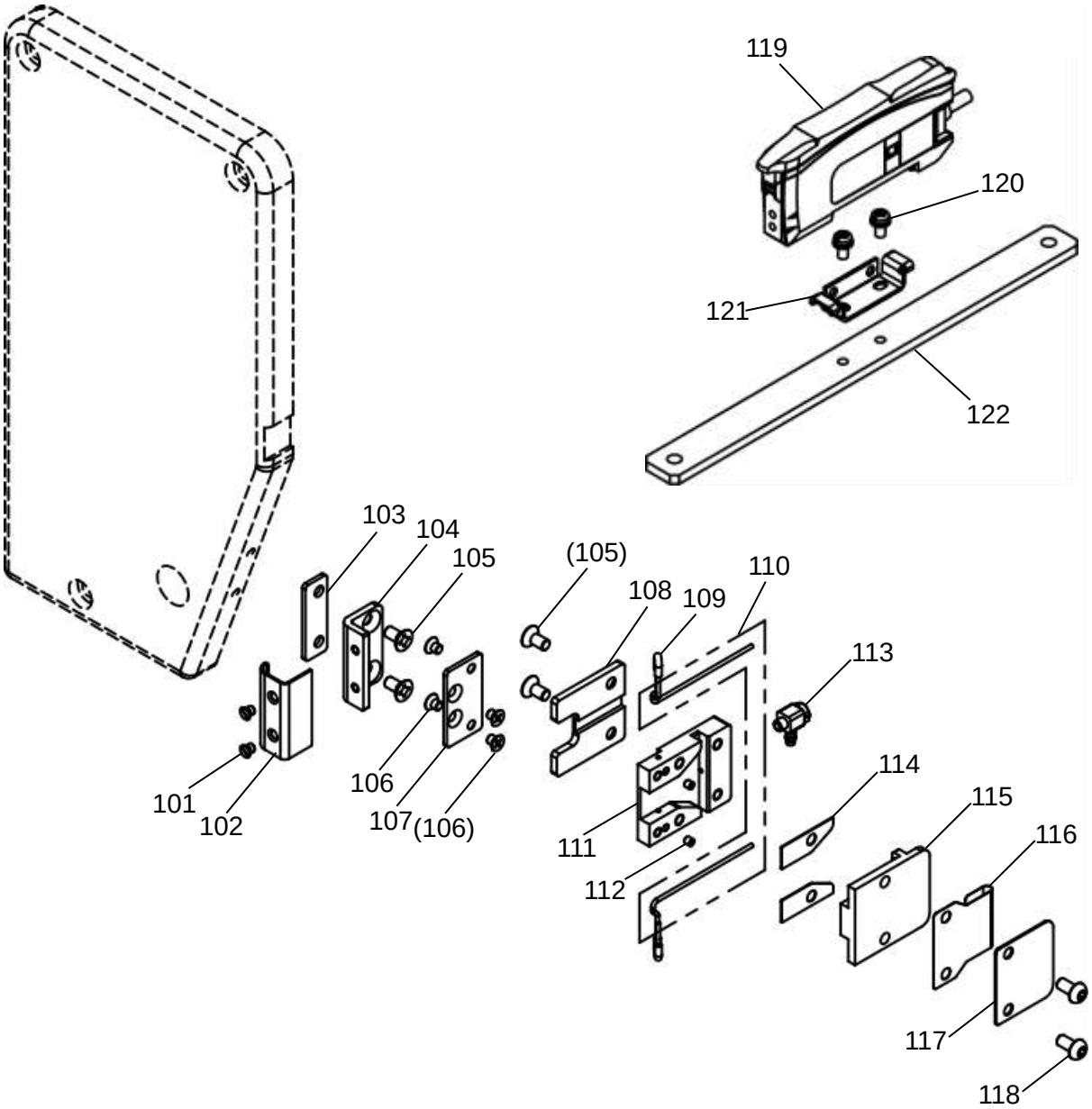

1-2. Solenoid valve parts, Accessories

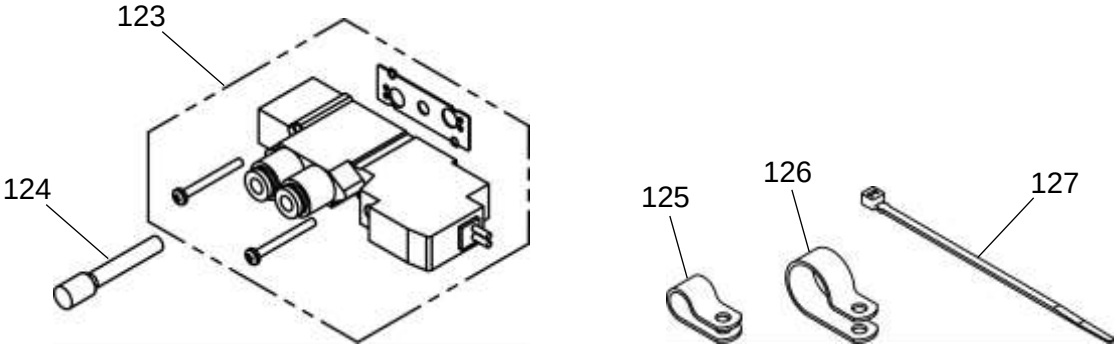

1-1. Abnormal stitch detector parts, Fiber amp parts (Parts list)

Fig No.	部品コード Parts No.	品　　名	Description	数量 Amt. Req.
101	M90605010	ｻﾗﾈｼﾞ 3/32(56)X2.8	Countersunk screw 3/32(56)X2.8	2
102	MJ61A2339	ｶﾊﾞｰ	Cover	1
103	MJ61A0476	ﾍﾞｰｽｽﾍﾟｰｻ	Base spacer	1
104	MJ61A0758	ﾌﾞﾗｹｯﾄ	Bracket	1
105	M90858004	P ｻﾗﾈｼﾞ M3X6	Countersunk screw M3X6	4
106	M92000010	ｻﾗﾈｼﾞ M2.5X3	Countersunk screw M2.5X3	4
107	MJ61A0601	ﾄﾘﾂｹｲﾀ	Adapter	1
108	MJ61A0770	ﾊｲｾﾝﾍﾞｰｽ	Wiring base	1
109	MJ61A0567	ﾋﾞﾆｰﾙﾁｭｰﾌﾞ	Tube	2
110	MJ61A0757	ﾌｧｲﾊﾞﾕﾆｯﾄ	Optical fiber unit	1
111	MJ61A1770	ﾒｲﾝﾍﾞｰｽ	Main base	1
112	M92004020	ﾛｯｶｸｱﾅﾂｷﾄﾒﾈｼﾞ M2X2	Set screw M2X2	2
113	MJ61A0571	ｶﾝﾂｷﾞﾃ	Connector	1
114	MJ61A1476	ｽﾍﾟｰｻ	Spacer	2
115	MJ61A1742	ﾍﾞｰｽﾌﾀ	Base cover	1
116	MJ40A0626	ｶﾞｰﾄﾞ	Guard	1
117	MJ40A0257	ﾊｻﾐｲﾀ	Plate	1
118	M93000022	ﾛｯｶｸｱﾅﾂｷﾎﾞﾀﾝﾎﾞﾙﾄ M3X6	Button bolt M3X6	2
119	MJ61A1757	ﾌｧｲﾊﾞｱﾝﾌﾟｸﾐﾀﾃ	Optical fiber amplifier assy.	1
120	M90859004	SW-PW ﾌﾟﾗﾏｲﾅﾍﾞﾈｼﾞ M3X6	SW-PW pan screw M3X6	2
121	MJ61A0602	ﾄﾘﾂｹｶﾅｸﾞ	Holder	1
122	MJ61A1601	ｱﾝﾌﾟﾄﾘﾂｹｲﾀ	Amplifier adapter plate	1

1-2. Solenoid valve parts, Accessories (Parts list)

Fig No.	部品コード Parts No.	品　　名	Description	数量 Amt. Req.
123	MJ25D0599	ﾃﾞﾝｼﾞﾍﾞﾝｸﾐﾀﾃ	Solenoid valve	1
124	MA30A0757	ﾌﾟﾗｸﾞ	Plug	1
125	MS14A1620	ﾅｲﾛﾝｸﾘｯﾌﾟ 4N	Nylon clip 4N	1
126	MB60A2620	ﾅｲﾛﾝｸﾘｯﾌﾟ 10N	Nylon clip 10N	1
127	MF06A1620	ｹｰﾌﾞﾙﾊﾞﾝﾄﾞ	Cable tie	5

2. Assembly procedures

CAUTION

★ To work in the presence of residual pressure in the pneumatic circuit It is dangerous. Please work after you remove the residual pressure always. The method of removing the residual pressure, and pull up the handle of the pressure regulating filter regulator, can be done by turning counter-clockwise until the pressure gauge shows 0.

★ When installing removal of parts, please go to turn off the power before. In addition, qualified personnel of electrical work, please be performed by wiring work.

★ Because the fiber unit (Fig.No.110) is very thin, It may causes break it if applying strong shock. Please handle with care.

2-1. Installing the Abnormal stitch detector

(1) Loosen the screw <1>, and remove the thread guide <2>.

Note Thread guide is attached to only shuttle hook type machines.

(2) Install the base spacer (Fig.No.103) and the bracket (Fig.No.104) by two screws (Fig.No.105) to the face plate <3>.

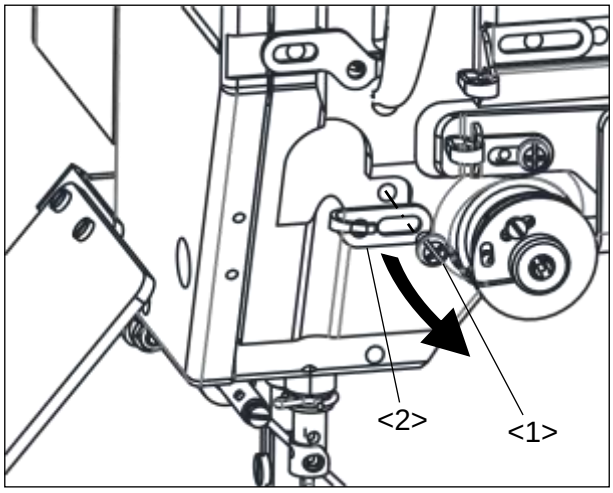

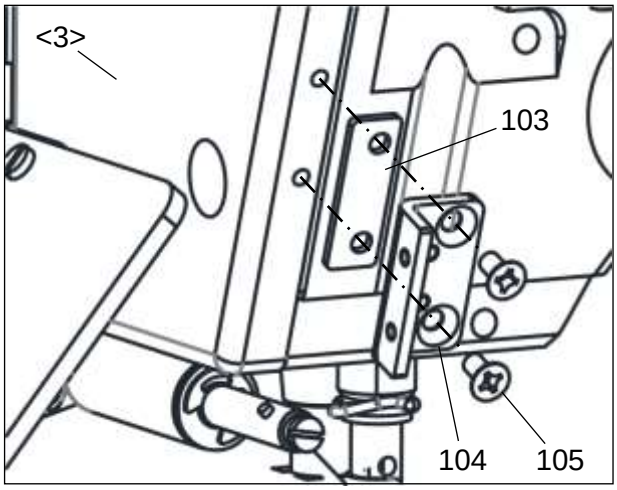

(3) Install the Abnormal stitch detector (consist of Fig.No.117 etc.) to the bracket (Fig.No.104) by two screws (Fig.No.106).

(4) Install the cover (Fig.No.102) to the bracket (Fig.No.104) by two screws (Fig.No.101).

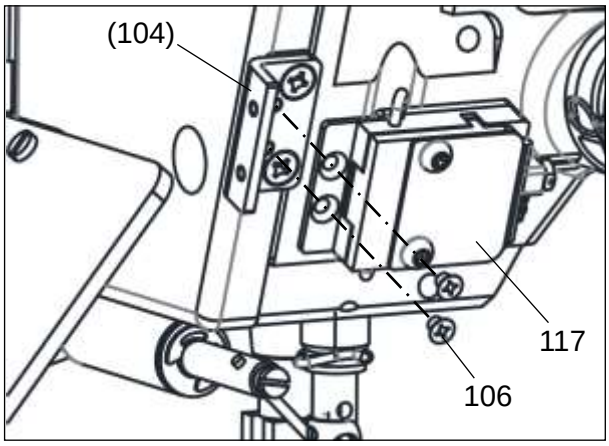

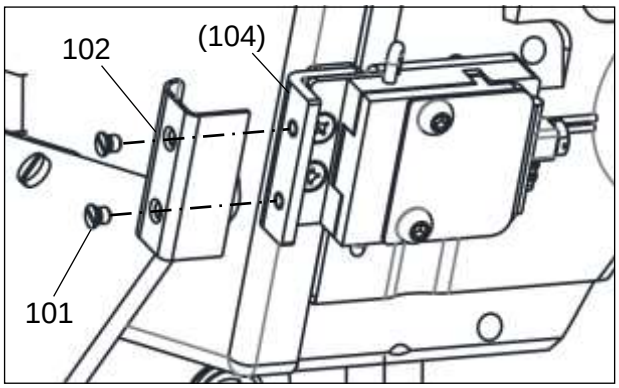

2-2. Installing the Fiber amp assy

(1) Remove two screws <2> installed in back word the control box <1>,
and install the amp bracket (Fig.No.122).

(2) Install the bracket (Fig.No.121) to the amp bracket (Fig.No.122) by two screws (Fig.No.120).

(3) Catch the Fiber amp assy on lower edge of the bracket (Fig.No.121), and install it while pushing up

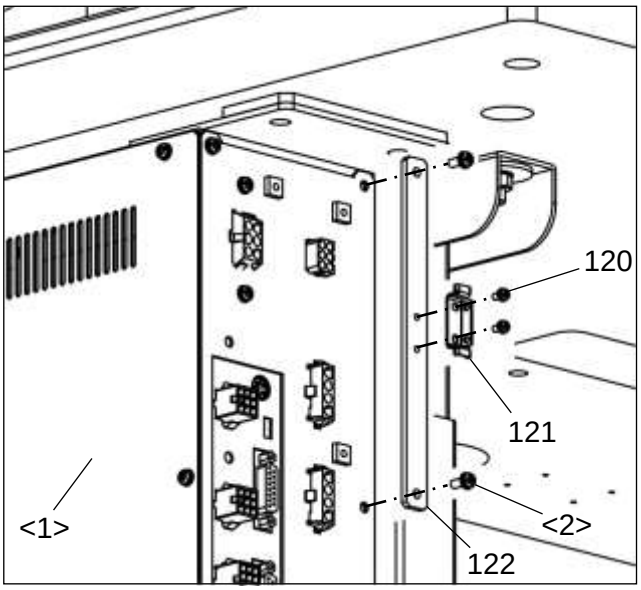

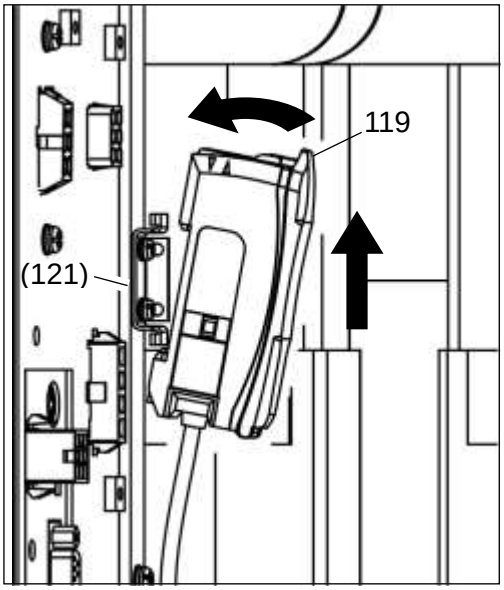

2-3. Setting of Connector

(1) Remove five screws <2>, and MIF board cover <1>.

(2) Pass the fiber amp assy's connector cable (Fig.No.119) through the side hole of MIF board bracket <3>.

Note If it is difficult to through the connector cable, through it after loosening two screws <5>. While being careful not to damage cables, close the shatter <4> and tighten two screws<5> again.

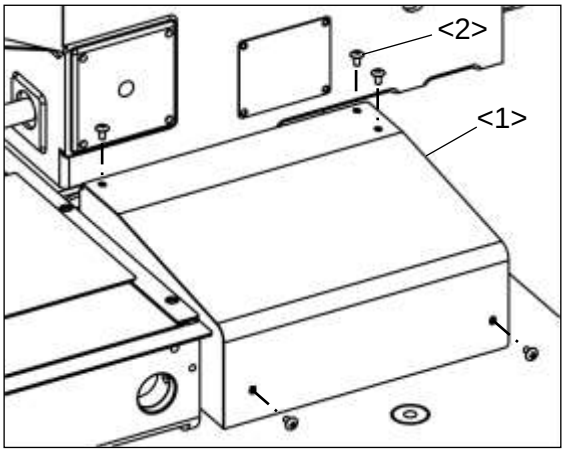

(3) Connect the connector to CON6 (CH) on the MIF board.

(4) Attach MIF board cover <1> with Screws <2> again.

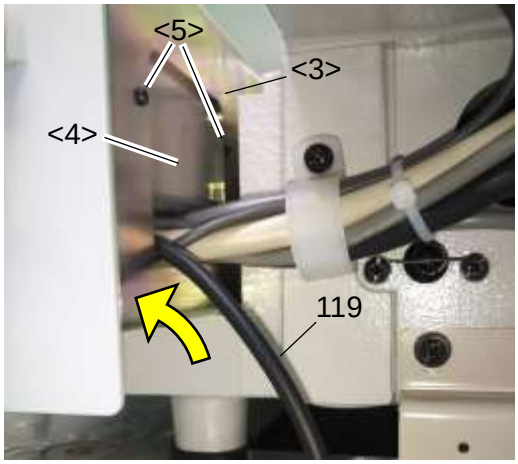

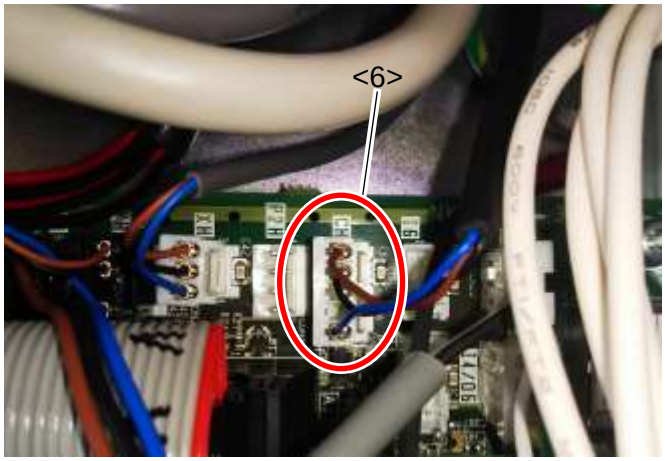

2-4. Installing Solenoid valve

(1) Pull up the adjustment handle of the Filter regulator <1> located under the table, and Turn counterclockwise until the pressure gauge shows 0.

(2) Remove five screws <3>, and motor cover <2>.

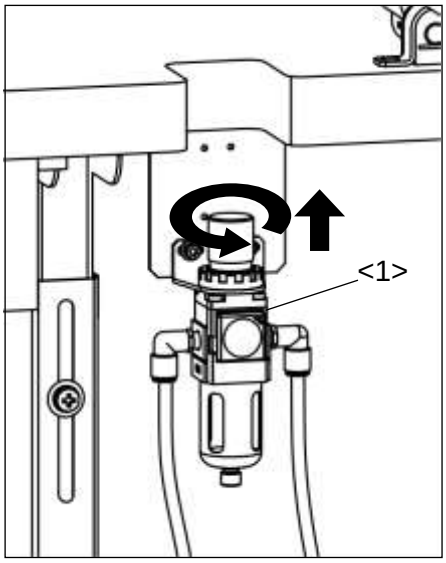

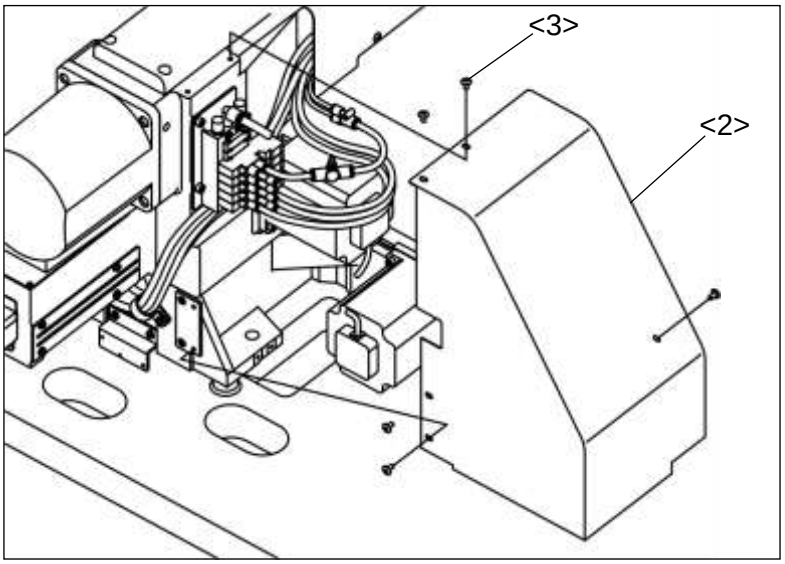

(3) Remove two screws <6> from Solenoid valve <4>, and blanking plate assy.

Note If two or more blanking plate assy are attached, please remove any one.

(4) Install the solenoid valve through gasket with two screws as shown in the figure, where the blanking plate assy <5> was removed (2).

Insert the plug (Fig.No.124) completely the hole on the left side of the solenoid valve.

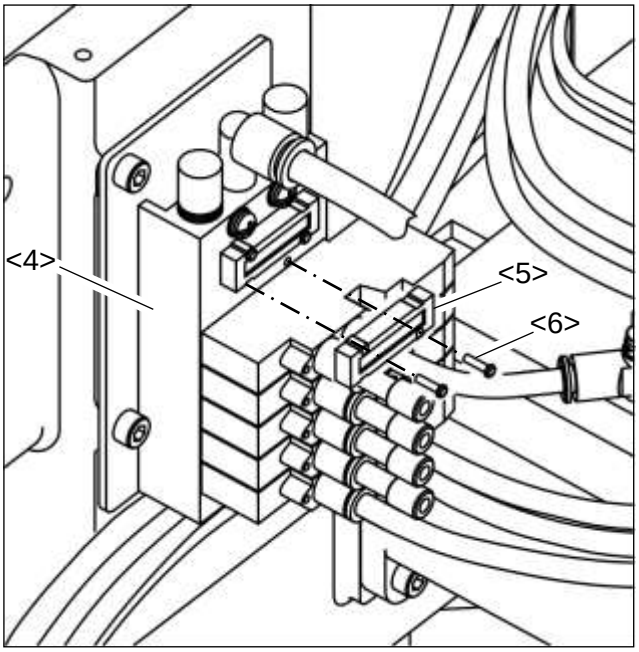

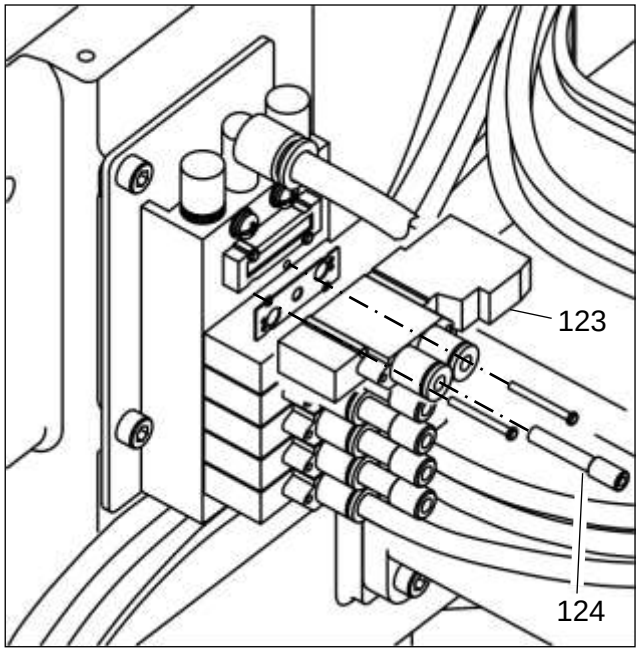

(5) Unplug 15 pin connector <7> from MIF board.

(6) Pass lead wires (red and black) of the Solenoid valve (Fig.No.123) through the UL tube <8> which the 15 pin connector is connected.

(7) Pass lead wires of the Solenoid valve (Fig.No.123) through the connector cap <9>. Completely insert the lead wire (red) into 15 pin connector 4, lead wire (black) into 5.

(8) Insert the 15 pin connector <7> into MIF board again.

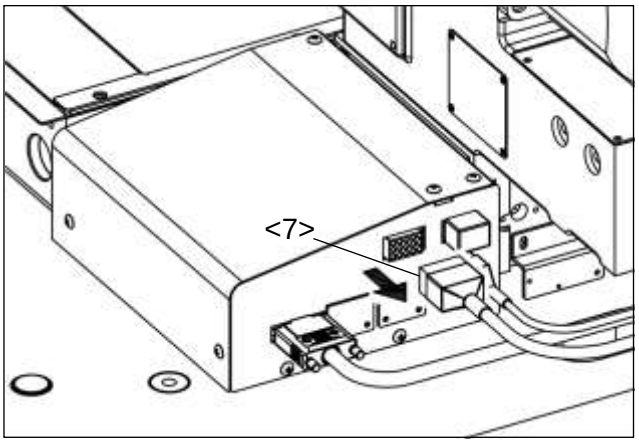

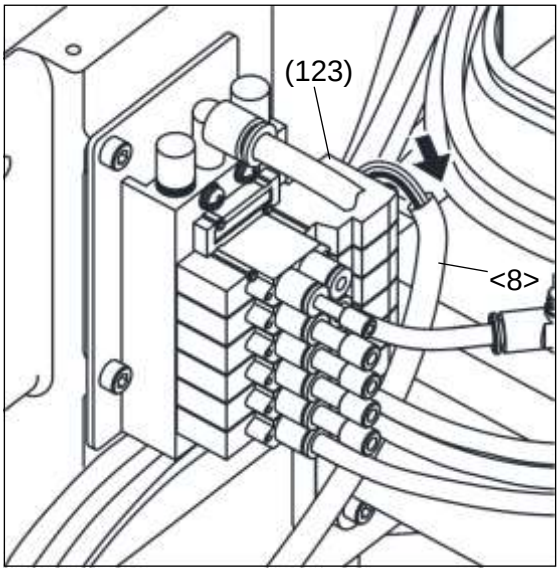

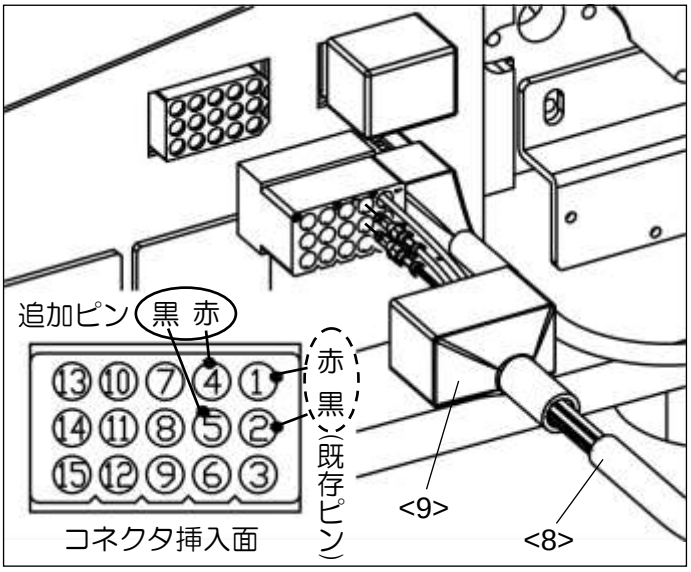

2-5. Piping

Piping two φ4 tubes (One contains a fiber unit) connected to the abnormal stitch detector installed in [2-1] [Installing the Abnormal stitch detector].

(1) Remove seven screws <3>, head cover <1>, and cover <2>.

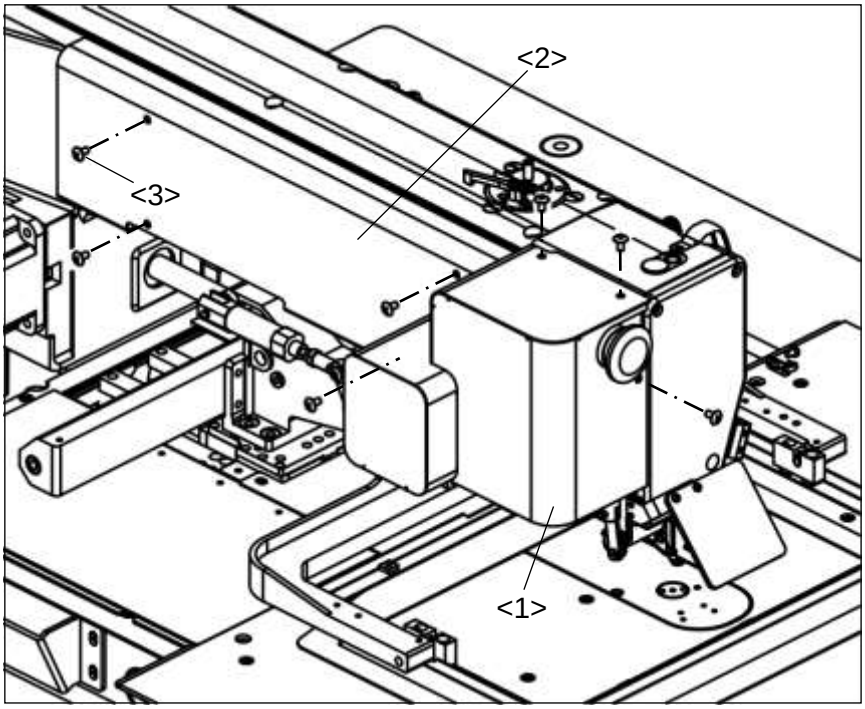

(2) Pull two φ4 tubes <4> to the left through the bottom of the sewing machine arm.

(3) Remove the left screw of the wiper bracket <5> on the left side of the sewing machine.

(4) Pass two φ4 tubes <4> through the nylon clip. Fix the nylon clip (Fig.No.125) to the wiper bracket <5> by using the screw removed in (3).

Note At this time, manually move the clamp adapter <6> to the front of the sewing machine. Make sure that the clamp adapter and φ4 tubes <4> don't touch each other and fix with the nylon clip.

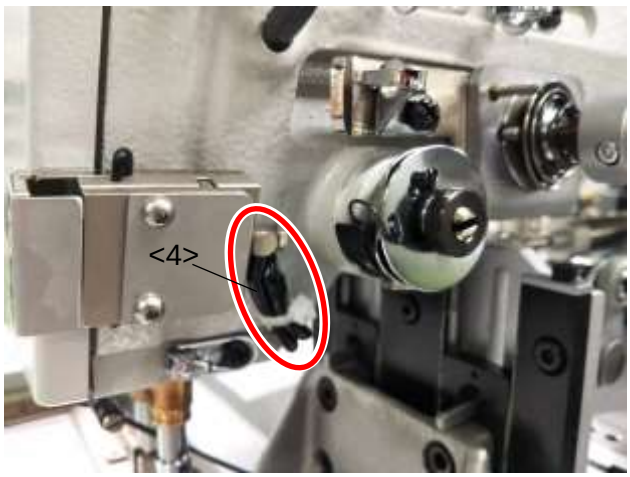

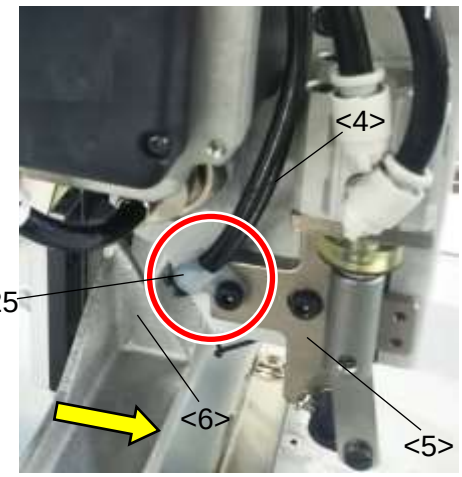

(5) Pass two φ4 tubes from the right side of the motor <7>. Bundle it with the existing tubes using a cable tie (Fig.No.127), and pipe it to the back of the sewing machine.

Note If the existing nylon clip is small, change the nylon clip (Fig.No.126).

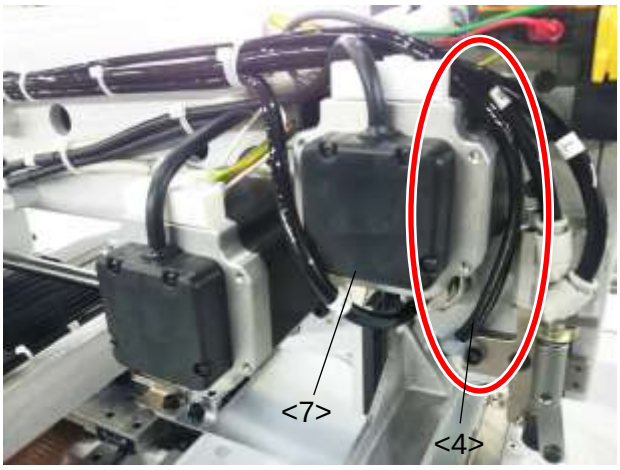

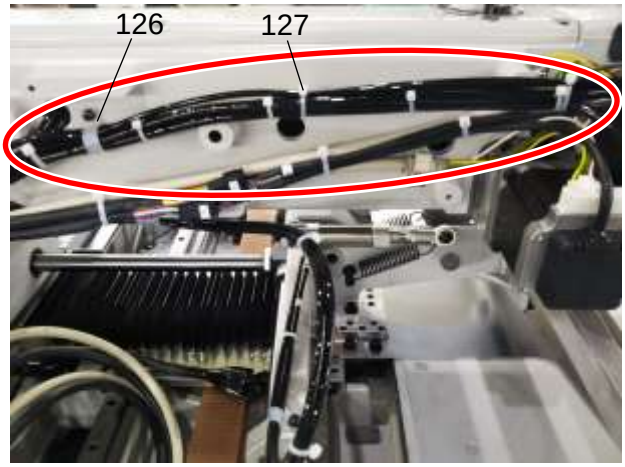

(6) Insert the end of φ4 tube (One without a fiber unit) completely into the right side of the solenoid valve (Fig.No.123) installed earlier.

Note If φ4 tube is long, cut and insert

(7) In the reverse order of [2-4] [Installation of solenoid valve] (1), turn the Filter regulator <1> handle clockwise to adjust the air pressure to 0.4 MPa (4kgf/cm^2) and push down the handle.

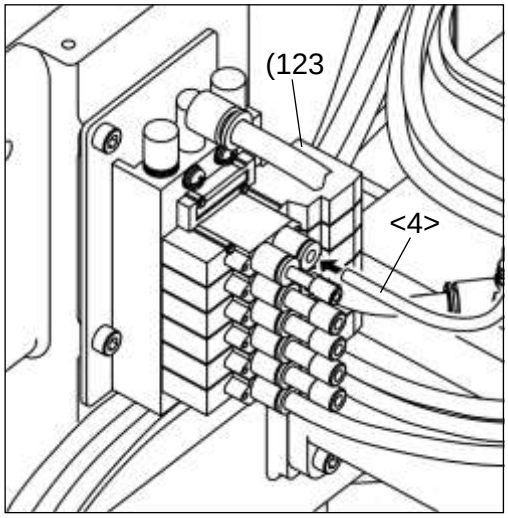

(8) Pass the other φ4 tube <4> (One with a fiber unit (Fig.No.110)) down through the hole in the table, Insert the fiber unit into the Fiver amp assy (Fig.No.119) mounted on the control box in [2-2] [Installing the Fiber amp assy] in the following procedure.

1. Open the protective cover.
2. Raise the lock lever.
3. Insert the fiber unit completely into the fiber unit insertion
4. Return the lock lever and put the protective cover.

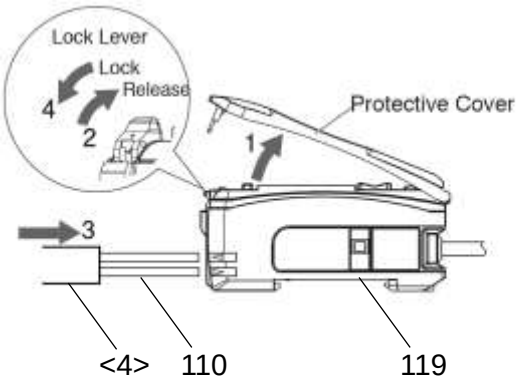

(9) Pipe the φ4 tube passed under the table as same as other cables refer to PLK-J2516-YU/ J2516R-YU technical manual [SEWING MACHINE HEAD] [3-10-7] [Fixing of the cables]

(10) Attach the motor cover removed in [2-4] [Installation of Solenoid valve], the head cover <1>, and the cover<2>.

3. How to use

3-1. How to thread the upper thread

Pass the upper thread through the abnormal stitch detector as shown on the right figure. How to pass the upper thread through other parts is different depends on the model, so confirm the technical manual [SEWING MACHINE HEAD] of each model.

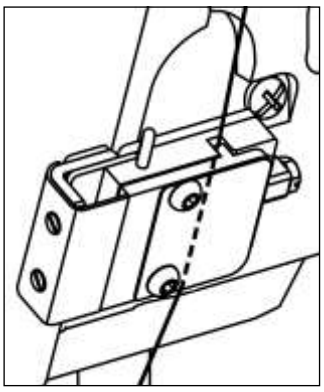

3-2. Setting of output customize

(1) Press  to  to  (need password) on the standard screen, open the Output Customize Setting screen.

(2) Set SKAR for output O8.

Note Please refer to the technical manual [Operation Panel] [16] [Input/output setting mode] for details on how to setting of custom output.

3-3. Setting of Fiver amp assy

Please set up of Fiver amp assy (Fig.No.119) as follows.
When resetting, turn the power switch on.

3-3-1. Changing of output signal

Change output method to output when a workpiece is in the detection area.

(1) Press  button.

(2) Change 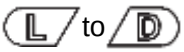 .

3-3-2. Smart tuning [Easy sensitivity setting]

Detect for thread Presence/Absence.

(1) Thread the Abnormal stich detector (consist of Fig.No.117 etc.) attached in right side of machine arm.

(2) Press  to  to  on the standard screen, and open the output signal confirmation panel.

(3) Change the panel of [Status reference mode] to [Test output mode]

Note Please refer to the technical manual [Operation Panel] [16] [Input/output setting mode] for checking detail of operation method (2), (3).

(4) On the operation panel, output the port set SKAR, and blow air. Loosen thread as shown on the right figure, and obstruct the sensor light<1> by thread.

In this state, press  button.

Note If red value of Fiver amp assy decrease, It is the state obstructing the sensor light.

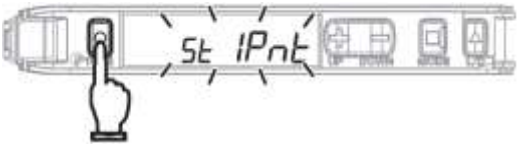

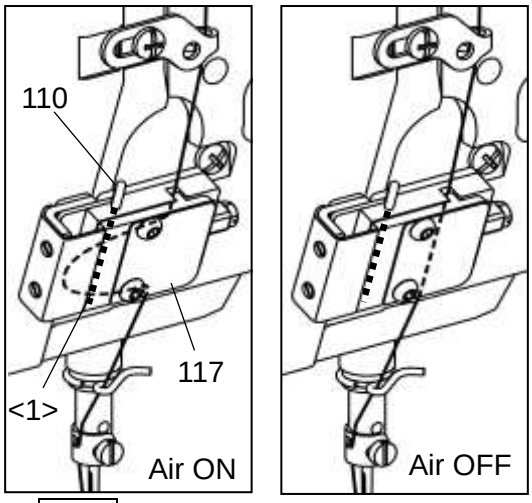

(5) On the operation panel, Stop blowing air by cancelling output SKAR, and pull thread as shown on the upper right figure.

Check separating thread and sensor light.

In this state, press  button again.

3-3-3. Setting of threshold level

Press  button and set threshold level “8000”.

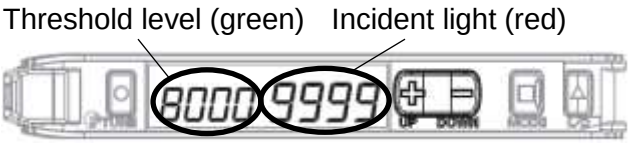

3-3-4. Setting of DPC function

DPC is the function restores changing of inner incident light if changing incident light by dust, and keep incident light display constant.

Please set up DPC function after setting 3-3-2[Smart tuning [Easy sensitivity setting]]

(1)Hold  button for 3 seconds or more to enter SET mode.

(2)Press  button few times to change display to “dPc oFF”. dPc oFF

(3)Press  button to change to change display to “dPc on”. dPc on

(4)Hold  button for 3 seconds or more again to finish setting.

3-3-5. Checking of incident light

Check incident light (refer to the figure of 3-3-3[Setting of threshold level]) value is “9999” when separating thread and sensor light. If value decrease, set incident light to “9999” as follows.

Note If incident light value decrease, erroneous detection may occur.

1. Connect the Fiber Unit again

Please refer to 2-5 [Piping] (8), Make sure the Fiber Unit is fully inserted into the Fiber amp assy.

2. Clean the abnormal stitch detector

Clean as follows because sensor light is obstructed by collecting the thread waste in the abnormal stitch detector.

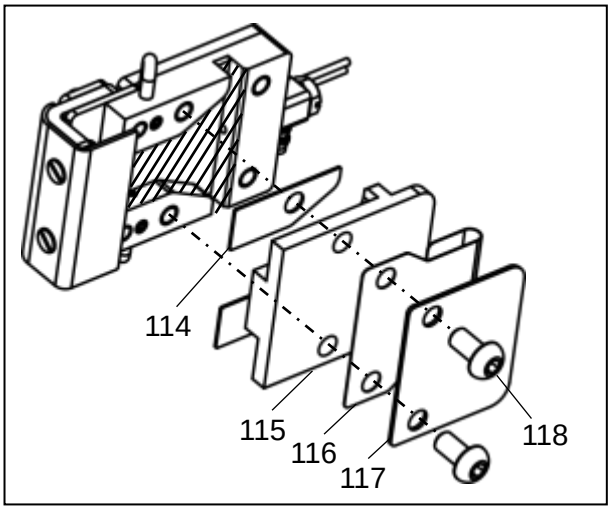

(1) Remove two button bolts (Fig.No.118), the plate (Fig.No.117), the guard (Fig.No.116), the base cover (Fig.No.115), and two spacers (Fig.No.114).

(2) Clean inside the abnormal stitch detector (Hatched area), and remove the thread waste.

(3) Attach spacers (Fig.No.114), the base cover (Fig.No.115), the guard (Fig.No.116), and the plate (Fig.No.117), with button bolts (No.118) again.

When seeing the abnormal stitch detector from above, attach the guard (Fig.No.116) with making an edge of the guard (No.116) contact a protrusion of the base cover (No.115) as shown on the right figure.

Note If an edge of the guard doesn’t contact a protrusion of the base cover, thread may be off from the abnormal stitch detector.

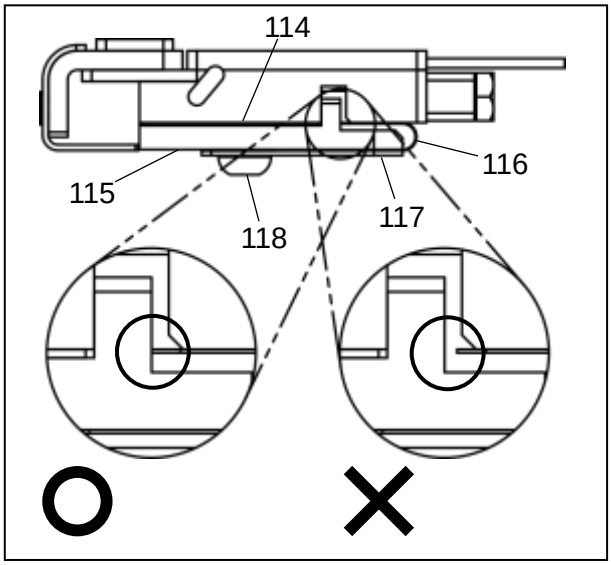

3-4. How to use the abnormal stitch detector

When using the abnormal stitch detector, set as follows.

(1) Press  to  on the standard screen, and open the Program Mode panel.

(2) Press the  icons to change the page, and press Traceability

(3) Set SKCF, S2CF to “ON”.

Note If you don’t use the abnormal stitch detector, set the above setting to “OF”.

3-5. Adjustment of the abnormal stitch detector gap

When sewing by thin thread, reduce a gap in the abnormal stitch detector by removing spacers.

Checking procedure：

(1) Press  to  to  on the standaed screen, and open the Motor angle･Home position Sensor･Temperature panel.

(2) Press the  icon, and open the Motor angle • Home position Sensor • Temperature panel 2.

(3) In this state, start sewing, and can check thread obstructing sensor light if “SENSOR INPUT” CH repeats ON/OFF.

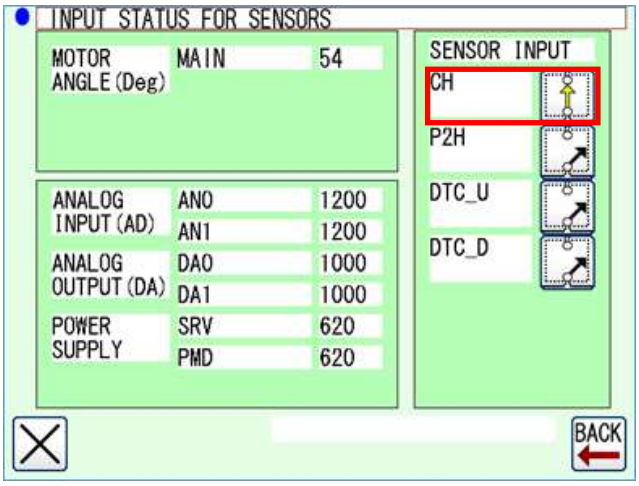

Adjustment of a gap procedure

(1) Remove two button bolts (Fig.No.118), the plate (Fig.No.117), the guard (Fig.No.116), and the base cover (Fig.No.115).

(2) Remove two spacers (Fig.No.114), and attach the base cover (Fig.No.115), the guard (Fig.No.116), the plate (Fig.No.117) with button bolts (Fig.No.118) again.

Note When attaching the guard, pay attention to installation position by referring to [3-3-5,2] [Clean the abnormal stitch detector].

Note After adjusting a gap, be sure to check that sensor amp unit receive the light normally by doing [3-3-2] [Smart tuning [Easy sensitivity setting]], [3-3-3] [Setting of threshold level], [3-3-5] [Checking of incident light] again.

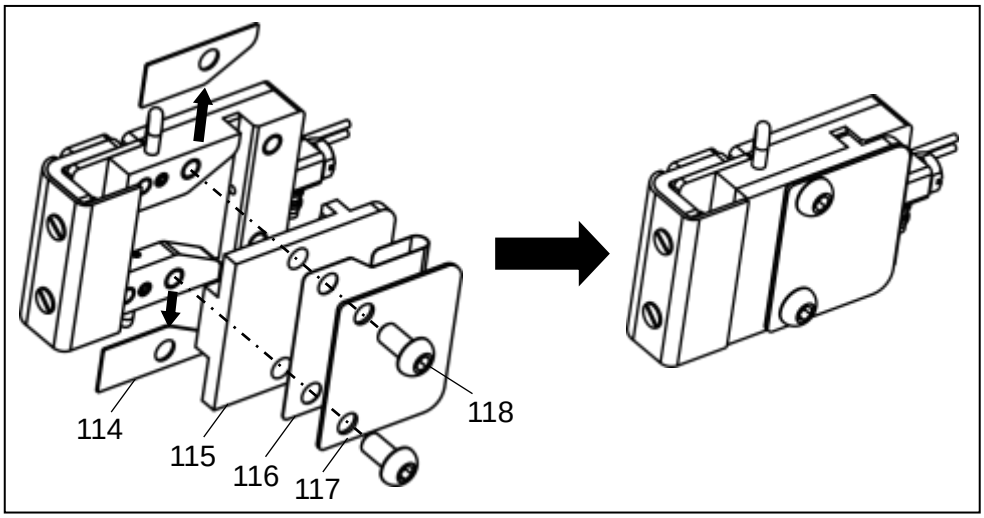

3-6. Setting of the abnormal stitch detection function

Please refer to the technical manual [Operation Panel] [22] [Program mode list] 23[Traceability] for checking detail of the abnormal stitch detection function.

3-6-1. Setting change example of the abnormal stitch detection1

When changing setting of the abnormal stitch detector1, refer to the following example.

Open the Traceability in the Program Mode refer to [3-4] [How to use the abnormal stitch detector].

(1) In the case of erroneous detection occurring without occurring the abnormal stitch.

->Adjust that erroneous detection doesn't occur by increasing set value of SKCS little by little.

Note If it is difficult to adjust, use test output of the abnormal stitch detection SKTS.

Checking procedure:

1. Press  to  to  (need password) on the standard screen, open the Output Customize Setting screen.
2. Set output signal is not used to SKTS.

   Note Please refer to the technical manual [Operation Panel] [16][Input/output setting mode] for checking detail of operation 1,2.
3. Connect output terminal is set in 2 to the outside lamp.

   -> It is possible to substitute for outside lamp by changing Halt signal being on output SSW to SKTS.
4. In this state, Sew while working the abnormal stitch detector.

   And adjust that lamp doesn't light while standard sewing by increasing set value of SKCS little by little.

(2) In the case of not detecting when the abnormal stitch occur.

-> Adjust that erroneous detection doesn't occur while standard sewing by decreasing set value of SKCS little by little.

(3) If you want not to detect while sewing at less than 1,000rpm.

-> Change set value of SKSP to "1000".

(4) If you want not to detect from start sewing to 6 stitches latter, and from end sewing to 8 stitches former.

-> Change set value of SKN1 to "6" and SKN3 to "8".

(5) If you want to change sewing stop timing by the abnormal stitch detector to when stop upper shaft next time.

-> Change set value of SKTP to "ED".

3-6-2. Setting change example of the abnormal stitch detection2

When changing setting of the abnormal stitch detector2, refer to the following example.

Note It is mentioned only about explanation different from the abnormal stitch detection1.

Open the Traceability refer to [3-5] [Adjustment of the abnormal stitch detector gap].

(1) Change set value of S2CE to the same value as SKCS set at "3-6-1(1), (2).

(2) In the case of erroneous detection occurring without occurring the abnormal stitch.

-> Adjust that erroneous detection doesn't occur by increasing set value of S2FL little by little.

MITSUBISHI ELECTRIC CORPORATION

Printed in Japan